THIS INFORMATION IS CONFIDENTIAL AND IS DISCLOSED TO YOU ON CONDITION THAT NO FURTHER DISCLOSURE IS MADE BY YOU TO OTHER THAN TOP-LINK PERSONNEL WITHOUT WRITTEN AUTHORIZATION FROM TOP-LINK LTD.

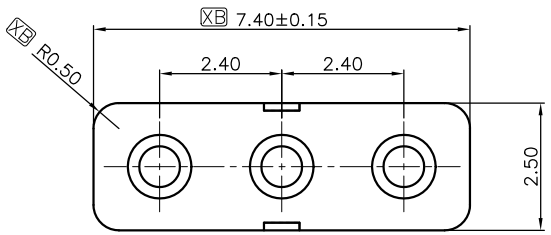

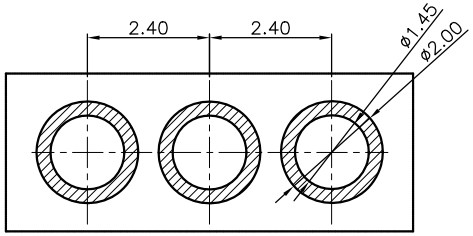

Recommended PCB Layout

Notes:
1 Dimensions shall be interpreted per ASME Y14.5M
2 Mechanical performance(See the table 1)
<2.1>The force is the average of forces obtained when plunger goes downwards and upwards
<2.2>Warning:Working height are not permitted to be less than Min working height
3 Electrical performance
<3.1>Current rating: 1.0A Max
<3.2>Voltage rating: 36VAC/DC
<3.3>Dynamic Resistance:30mOhm Max (between max and min working height)
<3.4>Insulation Resistance:100MOhm minimum
4 Environmental performance
<4.1>RoHS compliant
<4.2>Operating Temperature range:−40°C~+85°C
<4.3>Withstanding Higt Temperature:260°C/10Sec
5 Packaging:Carrier tape

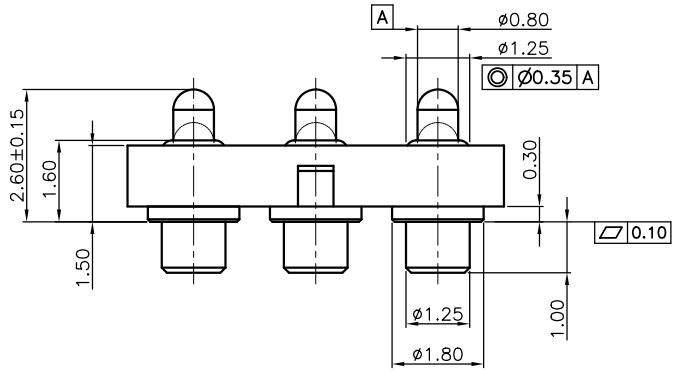

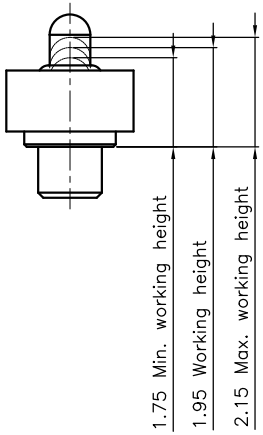

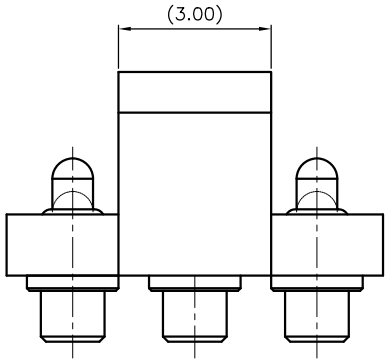

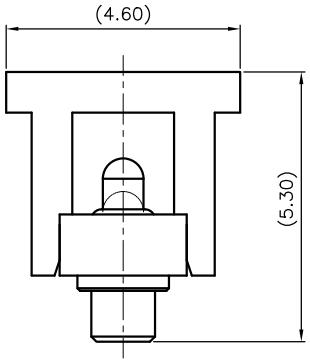

Table 1:Mechanical performance		
Working Height	1.95mm	40±10gf
Durability	10000 Cycles Min.	

Item	Part Name	Q'TY	Material	Finish
5	CAP	1	High temp.Plastic; UL94 V-0 Color Black	--------
4	Body	3	Leaded Brass	Au plating 0.1um min Ni plating 1.4um min
3	Plunger	3	Leaded Brass	Au plating 0.4um min Ni plating 1.4um min
2	Spring	3	Stainless steel wire	--------
1	Housing	1	High temp.Plastic; UL94 V-0 Color Black	--------

Item	Revision record	Date
A	New Release	2018.12.24
XB	EC HSG	2017.01.03
XA	New Release	2016.12.23

Top-Link Electronics Ltd.

TOLERANCES UNLESS OTHER SPECIFIED
0. = ± −
0.0 = ± 0.15
0.00 = ± 0.10
0.000= ± −
Angle: ±1°
SURF TEXTURE: REMOVE BURRS. BREAK SHARP EDGES R0.05 MAX.DO NOT SCALE PRINT.

Type: Customer drawing		Unit: mm	top-link
DWN:	APVD:		
CHK:	REL:		
NAME: Pogo PIN Connnector			
Scale: 1:1	Size: A4	Part NO.: 10101031855	Page: 1/1	Rev: A